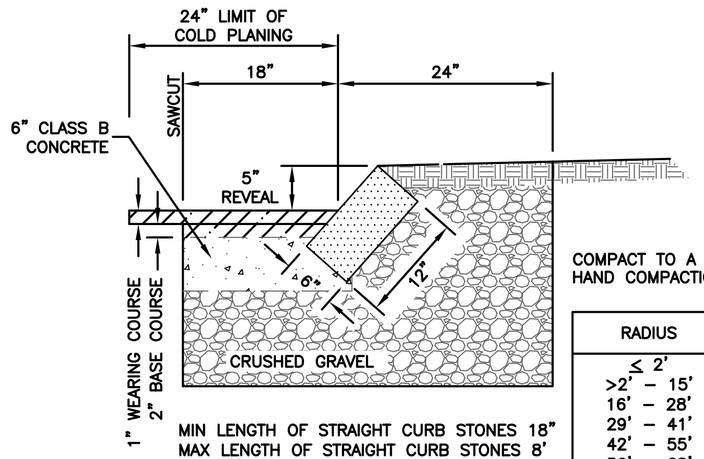

COMPACT TO A MINIMUM OF 95% HAND COMPACTION IS NOT ALLOWED

MIN LENGTH OF STRAIGHT CURB STONES 18"
MAX LENGTH OF STRAIGHT CURB STONES 8'
MAX LENGTH OF STRAIGHT CURB STONES LAID ON CURVES – SEE CHART

ADJOINING STONES SHALL HAVE THE SAME OR APPROXIMATE LENGTH.

RADIUS	MAX LENGTH
≤ 2'	CURVED CURB RADIAL JOINTS
>2' – 15'	18"
16' – 28'	2'
29' – 41'	3'
42' – 55'	4'
56' – 68'	5'
69' – 82'	6'
83' – 96'	7'
97' – 110'	8'
OVER 110'	

FINISH SURFACE AND TOLERANCES FOR SLOPED GRANITE CURB

AREA	FINISH SURFACE	TOLERANCE
ARRIS LINES	STRAIGHT AND TRUE ON TOP, FRONT AND ENDS. DRILL HOLES NOT DEEPER THAN ¼" ALLOWED IN ARRIS LINES.	+⅛" TO –⅛"
FACES		
EXPOSED PART	PLANES; NO DRILL HOLES IN FACES LONGER THAN 8" OR DEEPER THAN ¼".	+1" TO –1"
CONCEALED PART	DRILL HOLES NOT OBJECTIONABLE.	
ENDS	SQUARE WITH FACE EXCEPT AS INDICATED.	
JOINTS	ON TANGENT, MAXIMUM WIDTH: 1".	+½" TO –½"
	ON CURVES OVER 15' RADIUS, WIDEN TOP OR BOTTOM FROM 1" AS NECESSARY.	+½" TO –½"
	ON CURVES WITH 15' RADIUS AND UNDER, USE RADIAL JOINTS OR CURVED CURB AS INDICATED. OPTIMUM WIDTH: 1"	+½" TO –½"

SLOPED GRANITE CURB

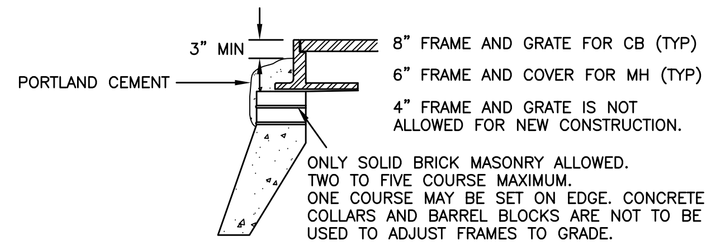

CATCH BASINS TO BE MAX ½" BELOW FINAL PAVEMENT.
MANHOLES TO BE ⅛" BELOW FINAL PAVEMENT.

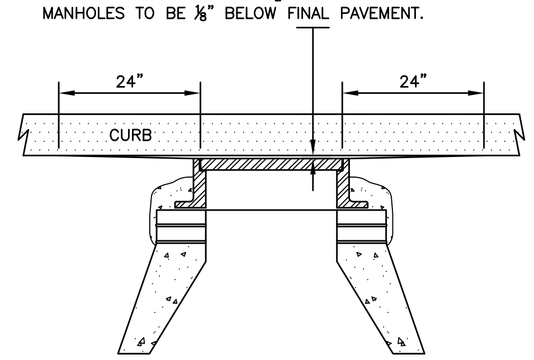

REINFORCED CONCRETE DROP INLET TOP WITH VERTICAL CURB

ADJUSTING FRAMES TO GRADE

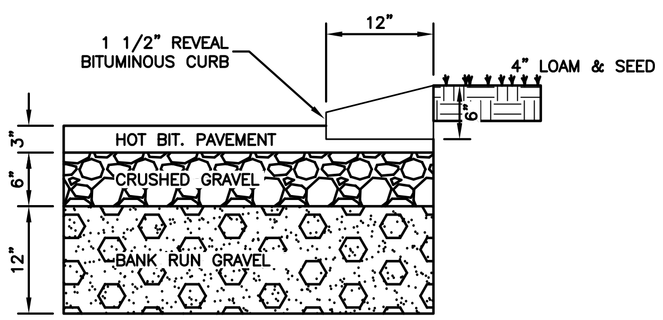

CAPE COD BERM

1. PRIOR TO PLACING THE CURBING, THE SURFACE OF THE PAVEMENT SHALL BE CLEANED AS DIRECTED AND PAINTED WITH A TACK COAT OF BITUMINOUS MATERIAL.

GENERAL

1. CONSTRUCTION OF THIS PROJECT SHALL BE IN ACCORDANCE WITH THE CITY OF CONCORD CONSTRUCTION STANDARDS AND DETAILS, LATEST EDITION, AND NHDOT: STANDARD SPECIFICATIONS FOR ROAD AND BRIDGE CONSTRUCTION, DATED 2010; STANDARD PLANS FOR ROAD AND BRIDGE CONSTRUCTION, 2001; SUPPLEMENTAL SPECIFICATIONS; AND SPECIAL PROVISIONS. THE WORK SHALL ALSO CONFORM TO FEDERAL, STATE AND CITY CODES AND REGULATIONS.
2. ALL WORK PERFORMED ON BEHALF OF THIS PROJECT, SHALL BE CONSTRUCTED IN ACCORDANCE WITH THE CITY OF CONCORD'S CONSTRUCTION STANDARDS AND DETAILS, LATEST EDITION.
3. THE CONTRACTOR SHALL REQUEST A PRECONSTRUCTION MEETING WITH ENGINEERING SERVICES TO DISCUSS SITE INSPECTIONS, SCHEDULES, SPECIAL CONDITIONS, ETC.

UTILITIES

1. THE CONTRACTOR IS RESPONSIBLE FOR NOTIFYING DIGSAFE (1–888–DIGSAFE) AT LEAST 72 HOURS PRIOR TO ANY EXCAVATIONS.
2. THE UNDERGROUND UTILITIES DEPICTED ON THESE PLANS HAVE BEEN LOCATED FROM FIELD SURVEY INFORMATION AND FROM EXISTING DRAWINGS. THE CONTRACTOR IS RESPONSIBLE FOR VERIFYING AND DETERMINING THE LOCATION, SIZE AND ELEVATION OF ALL EXISTING UTILITIES SHOWN ON THESE PLANS PRIOR TO THE START OF ANY CONSTRUCTION. THE CITY ENGINEER SHALL BE NOTIFIED IN WRITING OF ANY UTILITIES FOUND IN CONFLICT WITH THE PROPOSED CONSTRUCTION. APPROPRIATE REMEDIAL ACTION SHALL BE AGREED TO BY THE CITY ENGINEER BEFORE PROCEEDING WITH THE WORK.
3. THE CONTRACTOR SHALL CONTACT ALL UTILITY COMPANIES OWNING UTILITIES, EITHER OVERHEAD OR UNDERGROUND, WITHIN THE CONSTRUCTION AREA. THE PROTECTION OR RELOCATION OF UTILITIES IS ULTIMATELY THE RESPONSIBILITY OF THE CONTRACTOR.
4. SHOULD A PRIVATE UTILITY BE DISTURBED DURING CONSTRUCTION, THE OWNER SHALL BE NOTIFIED AND THE COST OF REPAIRS WILL BE AT THE CONTRACTOR'S EXPENSE.
5. HIGH TENSION OVERHEAD TRANSMISSION LINES ARE LOCATED THROUGHOUT THE PROJECT WITH CROSSINGS AT VARIOUS LOCATIONS AND RUNNING ALONG THE ROAD ON UTILITY POLES. THE CONTRACTOR IS ADVISED THAT EXTREME CAUTION SHOULD BE EXERCISED IN THE OPERATION OF EQUIPMENT IN THESE AREAS.

MISCELLANEOUS

1. A TEMPORARY TRAFFIC CONTROL PLAN (TTC) WILL BE REQUIRED FOR ALL WORK IN AND ADJACENT TO THE RESERVE AT STONEHAVEN. THE CONTRACTOR SHALL SUBMIT THE TTC TWO WEEKS PRIOR TO BEGINNING WORK. PROVISIONS FOR TEMPORARY ACCESSIBLE PEDESTRIAN ROUTES SHOULD BE INCLUDED IN THE DESIGN.
2. ALL SALVAGEABLE MATERIALS SHALL BE RETURNED TO THE CITY. TYPICAL SALVAGED MATERIALS INCLUDE: GUARDRAIL, SIGNS, SIGN POSTS, CURB, HYDRANTS, CAPS, FRAMES, GRATES AND COVERS. THE FINAL LIST OF MATERIALS TO BE SALVAGED SHALL BE DETERMINED BY THE CONSTRUCTION INSPECTOR.
3. THE CONTRACTOR SHALL BE RESPONSIBLE FOR MAINTAINING ALL EROSION AND SEDIMENT CONTROL DEVICES AS SHOWN IN THE PLANS THROUGHOUT THE DURATION OF THE PROJECT IN ACCORDANCE WITH APPLICABLE CITY AND NHDES STANDARDS.
4. THE CONTRACTOR SHALL ADJUST TO GRADE ALL EXISTING WATER GATE VALVES, SERVICE BOXES, CATCH BASINS, AND SEWER AND DRAIN MANHOLES WITHIN THE PROJECT LIMITS OR AS DIRECTED BY THE CONSTRUCTION INSPECTOR. ITEMS WITHIN THE LIMITS OF THE PROPOSED ROADWAYS SHALL BE SUBSIDIARY TO ITEM 403.11 – HOT BITUMINOUS PAVEMENT, MACHINE METHOD. ITEMS OUTSIDE OF THE PROPOSED ROADWAYS SHALL BE PAID PER THEIR RESPECTIVE ITEM.
5. THE CONTRACTOR SHALL PROVIDE TEMPORARY PAVING AT LOCATIONS DETERMINED BY THE CONSTRUCTION INSPECTOR.
6. PERMANENT PAVEMENT AND ROADWAY BASE MATERIAL WILL BE REPLACED "IN KIND" TO MATCH ADJACENT CONDITIONS.
7. THE CONTRACTOR SHALL STABILIZE ALL DITCHES, SWALES, AND EXPOSED SLOPES PRIOR TO DIRECTING STORM WATER RUNOFF TO THEM.
8. ALL EXCAVATIONS SHALL BE THOROUGHLY SECURED ON A DAILY BASIS BY THE CONTRACTOR AT THE COMPLETION OF CONSTRUCTION OPERATIONS IN THE IMMEDIATE AREA.

PERMITS

1. THE CONTRACTOR SHALL APPLY FOR AN EXCAVATION PERMIT (AVAILABLE FROM ENGINEERING SERVICES) PER CITY ORDINANCE ARTICLE 5–1–4 FOR WORK WITHIN THE CITY RIGHT–OF–WAY OR ON CITY OWNED PROPERTY.
2. THE CONTRACTOR SHALL APPLY FOR AN ENCUMBRANCE PERMIT (AVAILABLE FROM ENGINEERING SERVICES) PER CITY ORDINANCE ARTICLE 5–1–5 TO OBSTRUCT/OCCUPY A STREET, ALLEY, SIDEWALK, OR OTHER PUBLIC PLACE.
3. THE CONTRACTOR SHALL APPLY FOR A DRIVEWAY PERMIT (AVAILABLE FROM ENGINEERING SERVICES) PER CITY ORDINANCE ARTICLE 5–1–8 TO REPAIR, WIDEN, RECONSTRUCT OR CONSTRUCT A DRIVEWAY.

SURVEY

1. RIGHT–OF–WAY AND PROPERTY LINES ARE APPROXIMATE AND SHOWN FOR CONSTRUCTION PURPOSES ONLY AND ARE NOT INTENDED TO SHOW EXACT LOCATION.
2. THE CONTRACTOR MUST VERIFY THE BENCHMARK PRIOR TO BEGINNING WORK.

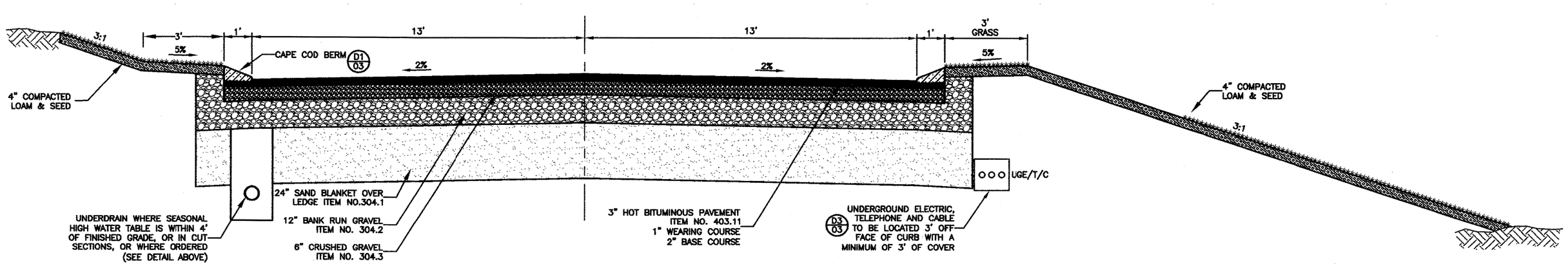

TYPICAL ROADWAY CROSS SECTION

NUMBER	DATE	DESCRIPTION
–	–	–
–	–	–
–	–	–
–	–	–
–	–	–

REVISIONS AFTER PROPOSAL

NUMBER	DESCRIPTION
–	–
–	–
–	–
–	–
–	–

SURVEYED BY:	–	DATE: –
DESIGNED BY:	–	DATE: –
DRAWN BY:	SAS	DATE: 04-02-2012
CHECKED BY:	–	DATE: –
PROJECT INFO:	–	

S:\DWG\~ Projects ~ PRIVATE DEVELOPMENT\Private Development Projects\2005 PROJECT REVIEWS\2005-21, Sanborn Rd, Reserve at Stonehaven\Autodesk\STONEHAVEN-DSGN.dwg Monday, April 30, 2012 1:48:33

CITY OF CONCORD, N.H.

THE RESERVE AT STONEHAVEN
SANBORN ROAD

DETAILS

FILE NAME	PROJECT NO.	SHEET NO.	TOTAL SHEETS
STONEHAVEN–DSGN.dwg	B34–12	2	2